DSM - DAPNIA

Mechanical Design of a Nb_3Sn Quadrupole Magnet at CEA/Saclay

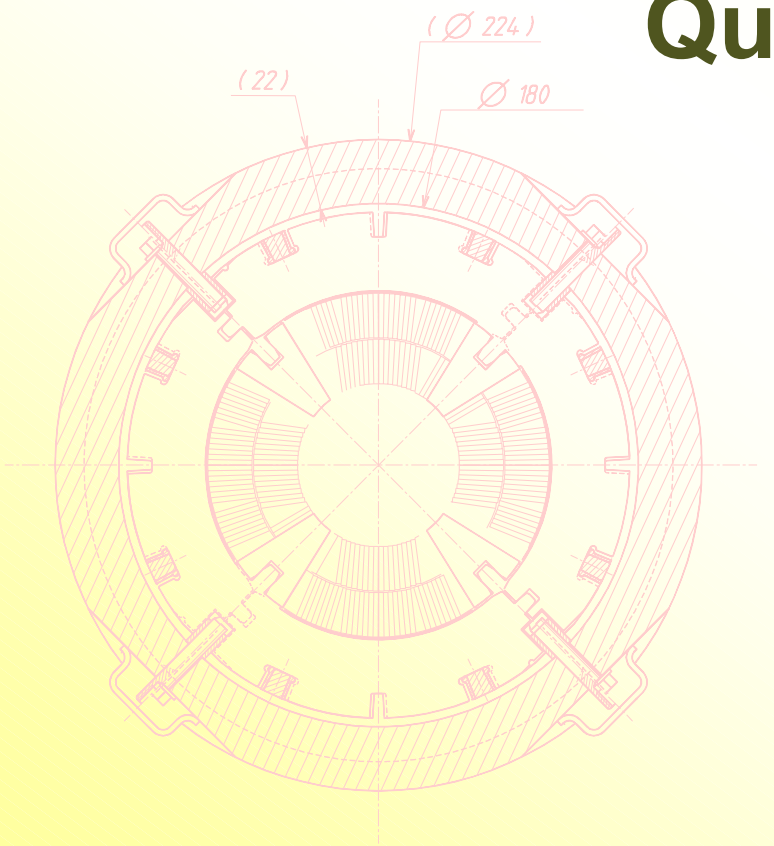

M. Segreti

CEA/DSM/DAPNIA/SACM

Content

- Introduction
- Mechanical Design
- FE Model Results
- Conclusions

Nb_3Sn Quadrupole Program Main Goals

- Get an experience in the Nb_3Sn technology keeping in mind the industrialization process
- Build a 1-m-long model, 56-mm single aperture with no magnetic yoke
- Same geometry as the LHC arc quadrupole magnets
- Use available Nb_3Sn wires for the model (765 A/mm^2 @12T, 4.2K)

Gradient	211 T/m
Current	11870 A
B_{peak}	8.3 T

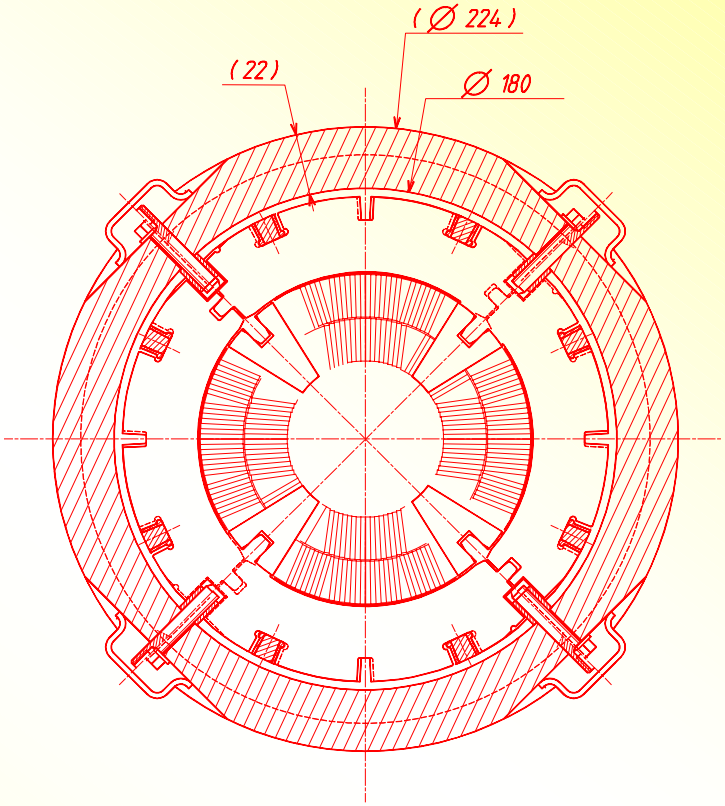

Courtesy of J. Thinel

Final Focusing Quadrupole magnets at TESLA

- TESLA original CDR use final focusing quadrupole in a solenoidal field (CMS type) included in the detector
- Field requirements are at the limits for NbTi technology

- Gradient 250 T/m
- Need to use a more performant cable: 4-years collaboration with Alstom to develop high-Jc wire (2000 A/mm^2 @ 12T, 4.2 K)

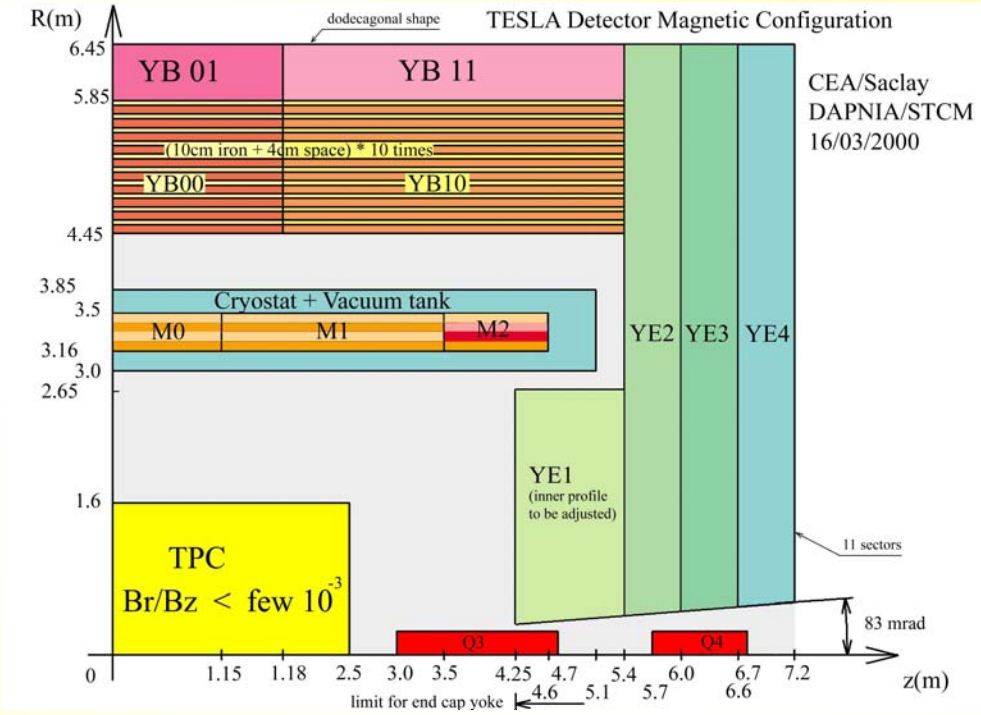

Courtesy of F. Kircher

Collaring process

- The coil assembly will be restrained by laminated, 2-mm thick, austenitic steel collars locked by eight, full-length, tapered keys

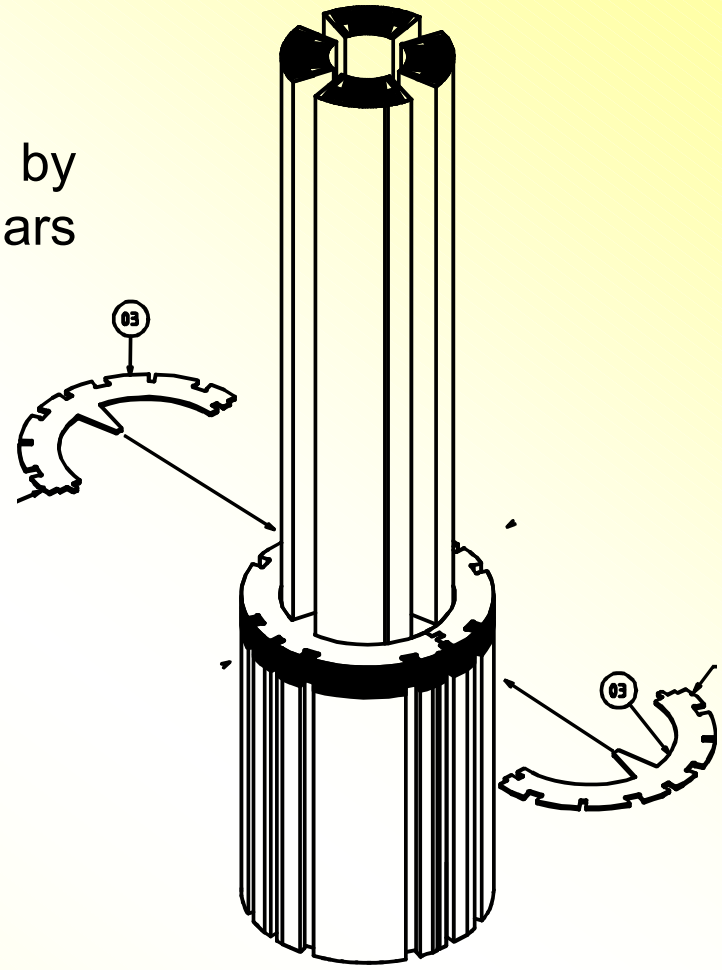

- The pre-compression obtained is needed both:
  - to compensate the thermal shrinkage differentials during cool-down
  - and to give a better redistribution of the stress during excitation

Magnetic forces

Forces due to the gradient

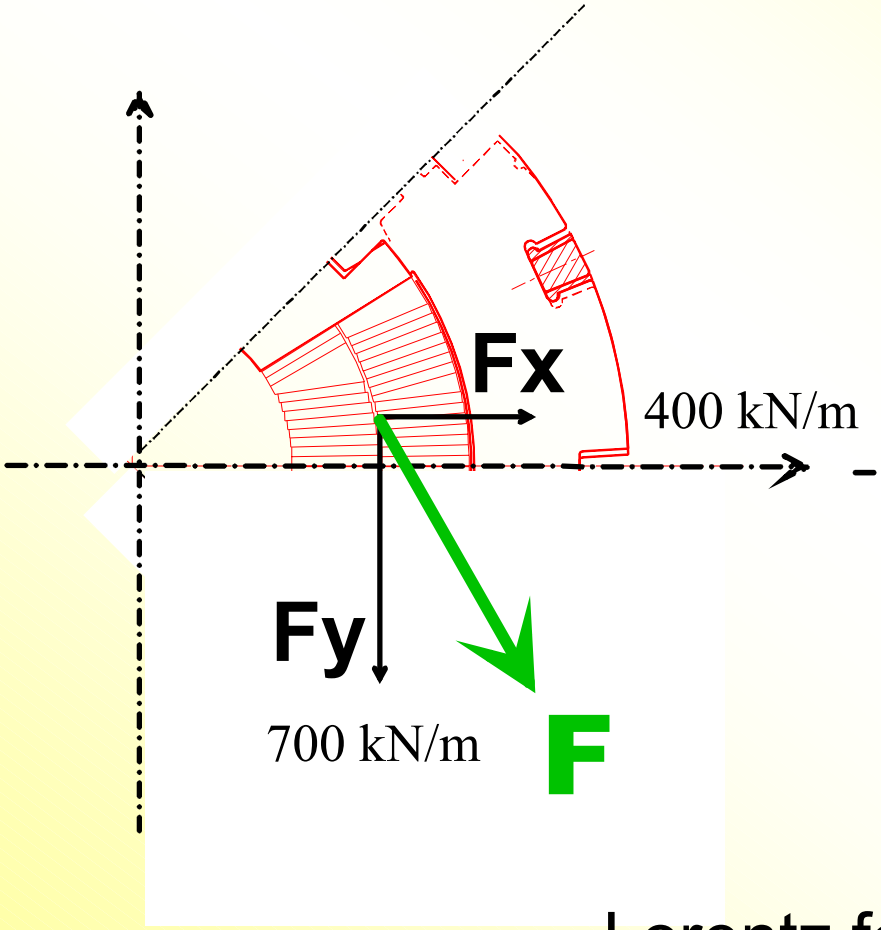

Forces added near the coil head (TESLA)

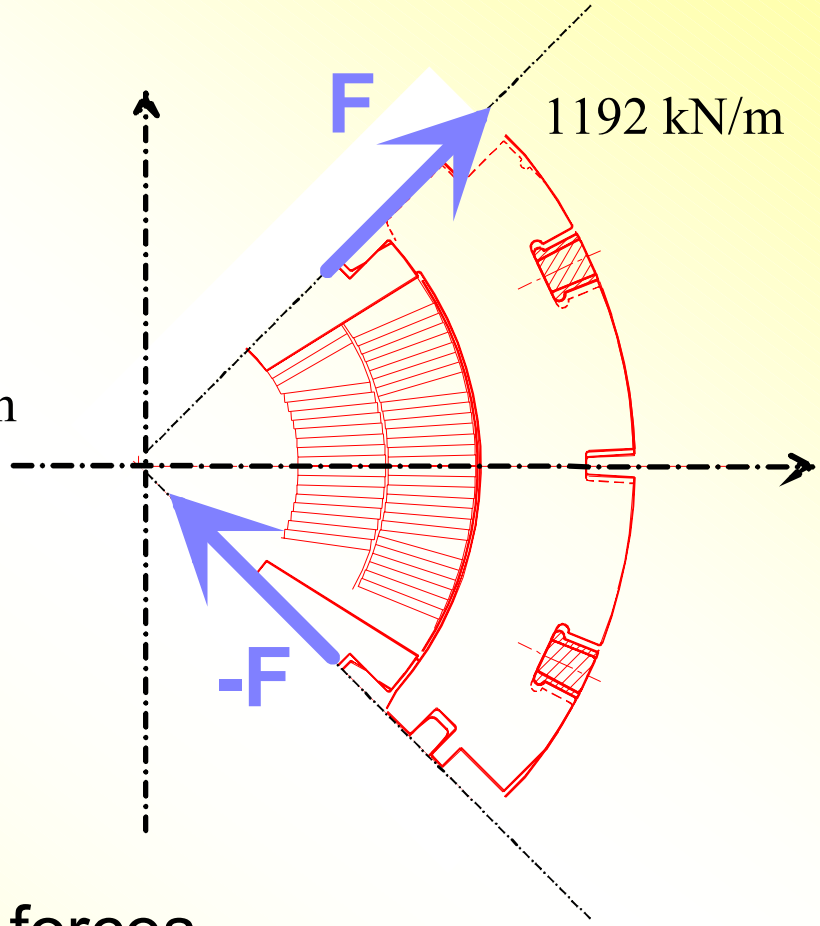

Lorentz forces

Mechanical Design

- A 3D contact FE model of the structure has been developed using COFAST3D (LMT-Cachan) which is a modular approach based on the CASTEM software package

- All successive steps of loading history, from collaring to cool-down and to excitation are simulated

- Contact with friction are taken into account in this model

- Due to the symmetries, the FE model is restricted to 1/4th of the quadrupole magnet cross section

Mechanical Design

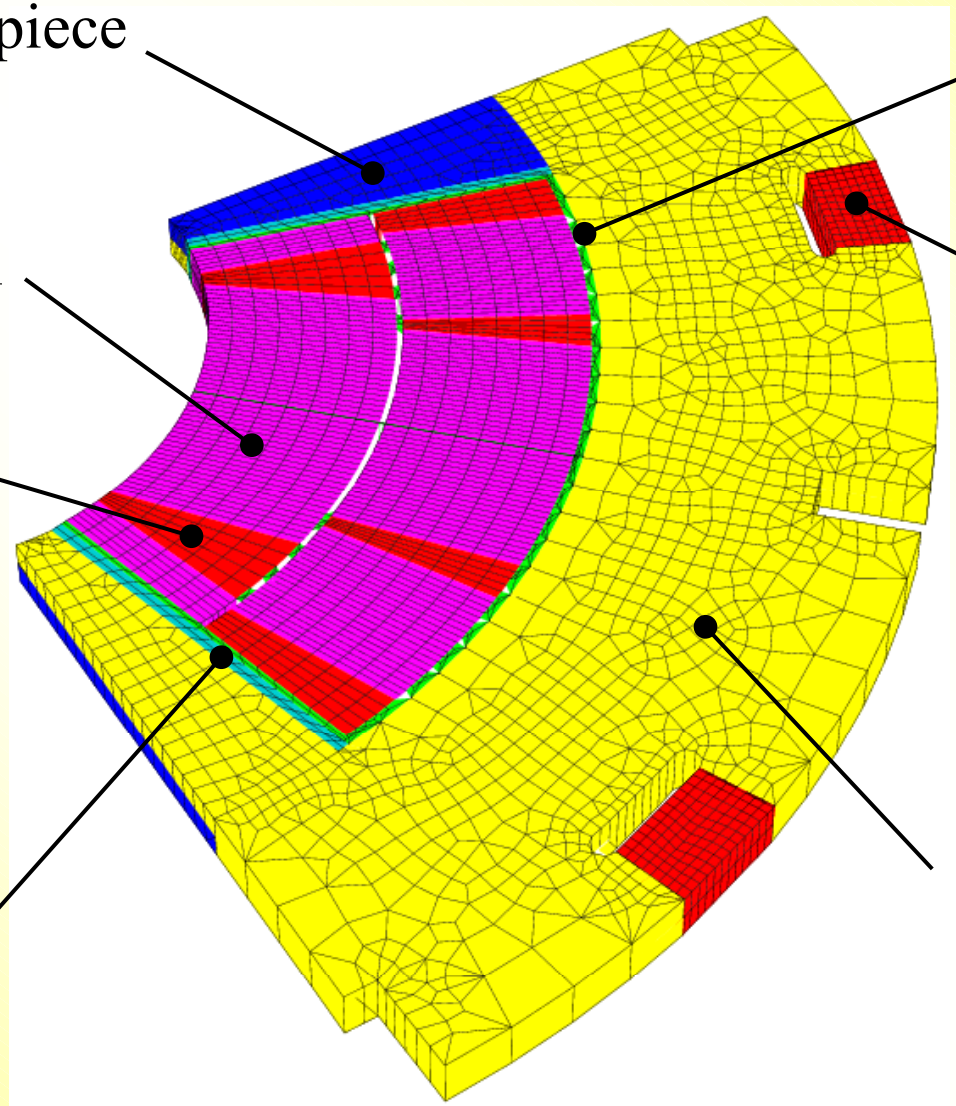

Mechanical Design

COFAST3D is based on a decomposition of the structure into sub-structures and interfaces for an easier iterative resolution scheme

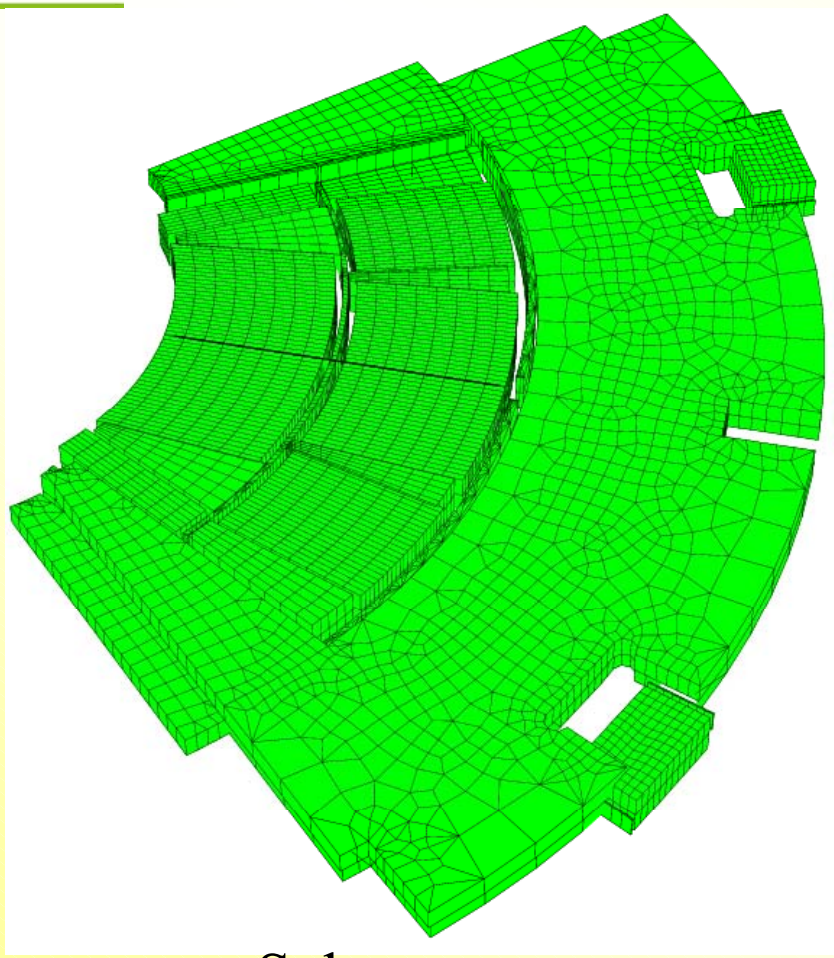

Sub-structures

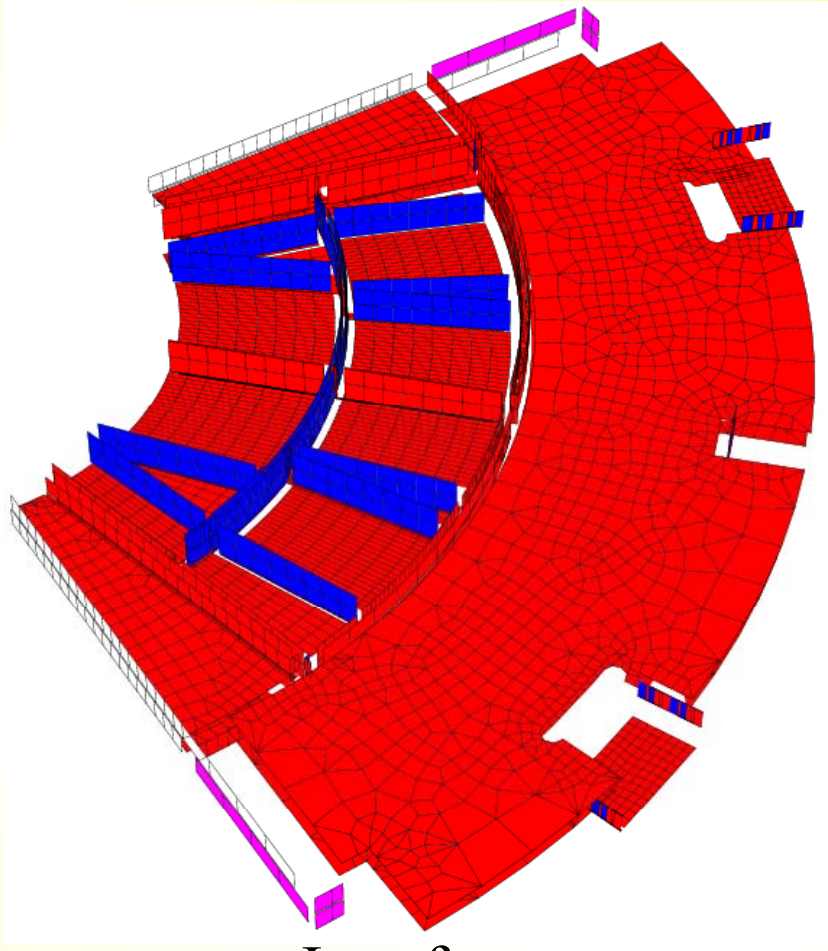

Interfaces

Thermal and Mechanical Properties

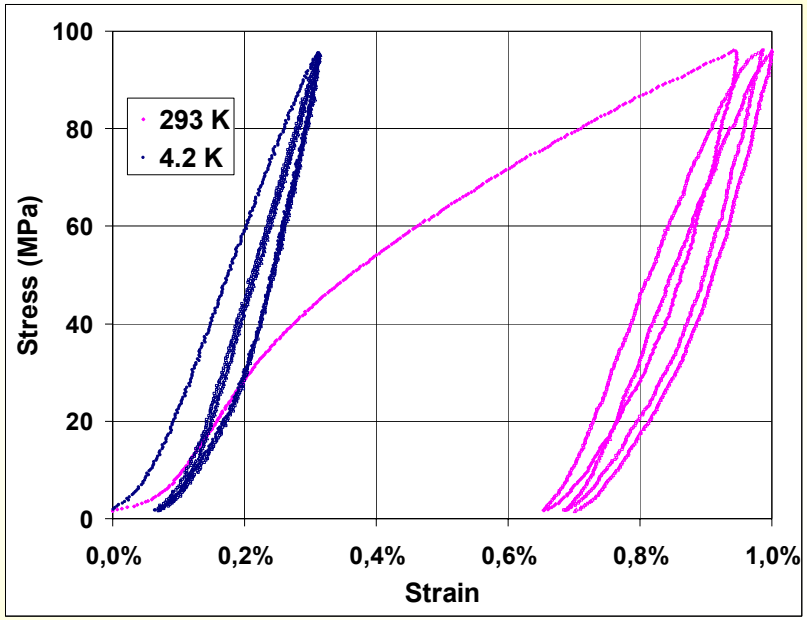

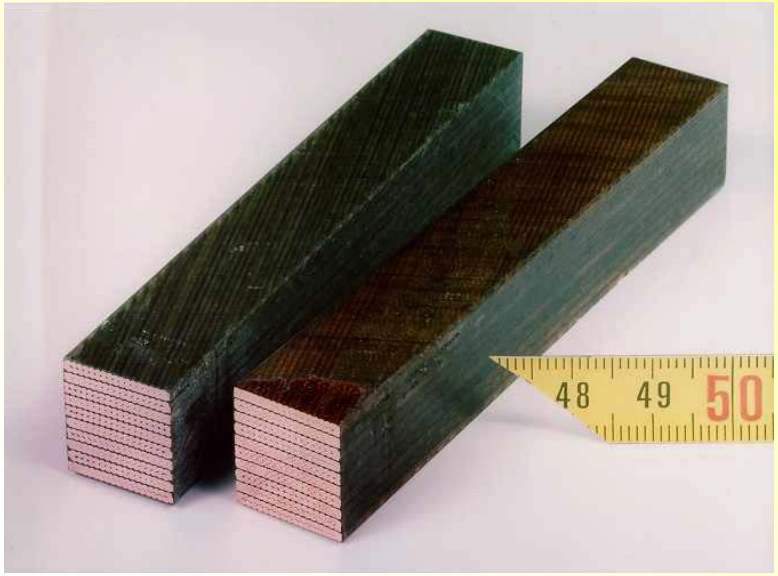

Materials *components*	Temp. (K)	Young's modulus (GPa)	Integrated thermal shrinkage coefficient (mm/m)
Steel 13Rm19	300	210	
Collars & Keys	4.22	210	-2.9
CuAl9	300	110	
Angular wedges	4.22	110	-3.6
Insulation	300	4	
	4.22	4	-6.0
Nb_3Sn + tape + resin	300	30	
Conductor package	4.22	42	-3.9

Preliminary tests on ten-stack samples

FE Model results

	Collaring with bars		Collaring with keys		Cool down		Energization	
Coils								
Stress (MPa)	σ_θ	σ_r	σ_θ	σ_r	σ_θ	σ_r	σ_θ	σ_r
Peak stress	**-32**	-13	**-79**	-38	**-64**	-31	**-75**	-34
Average over 1st layer	-22	-4	-61	-12	-44	-5	-41	-12
Average over 2nd layer	-18	-7	-50	-21	-35	-9	-38	-17
Average over coil	-20	-6	-55	-18	-39	-7	-39	-15
Minimum over pole plane	-14		-50		-27		**-13**	
Displacement (mm)	Δ_θ	Δ_r	Δ_θ	Δ_r	Δ_θ	Δ_r	Δ_θ	Δ_r
Average over midplane		-0,019		-0,056		-0,197		-0,187
Average over pole plane	-0,003	-0,024	-0,005	-0,056	-0,005	-0,202	-0,009	-0,196
Collars								
Peak Von Mises stress	100		960		757		725	

Average loss of pre-stress ~ 16 MPa during Cool down

FE Model results

- All parts of the coil assembly remain in compression at nominal current
- Peak stress < 150 MPa (critical level) at any time

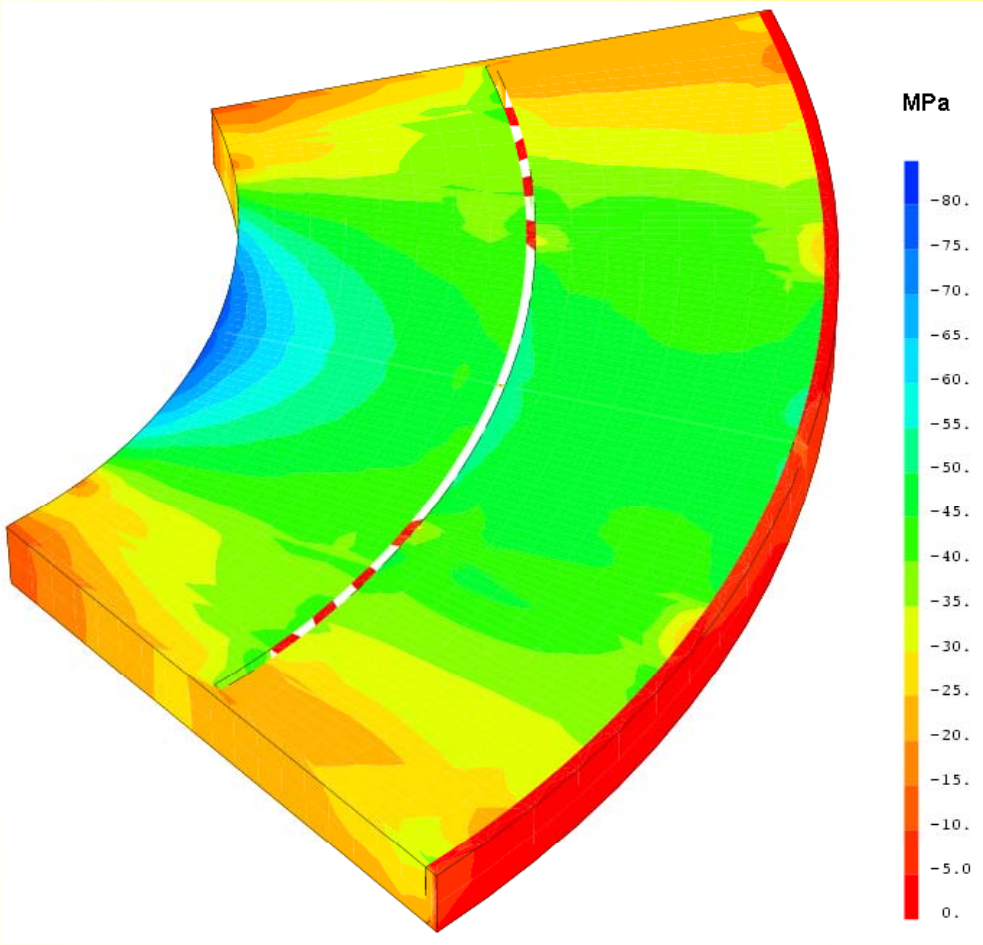

Azimuthal stress at 4.2 K and 11870 A

FE Model results

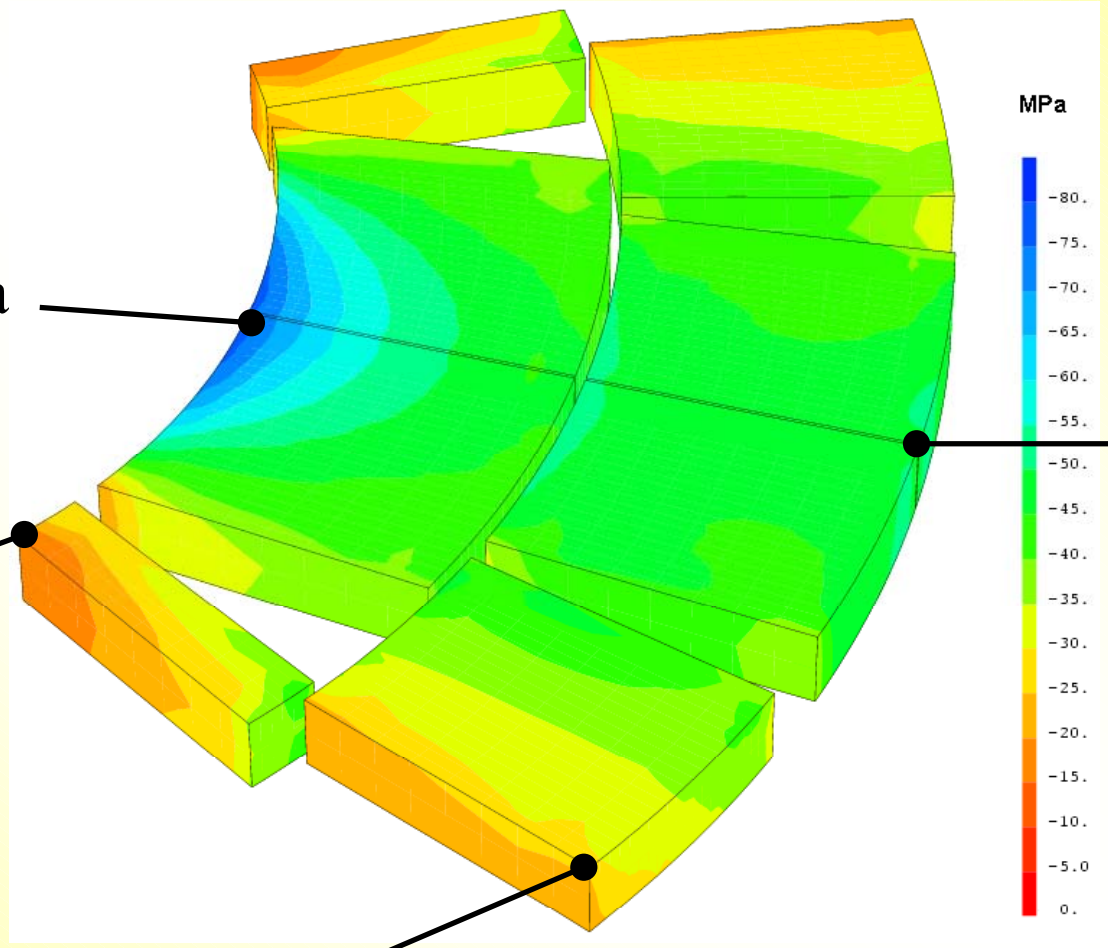

-73 MPa

-45 MPa

-13 MPa

-20 MPa

Azimuthal stress at 4.2 K and 11870 A

FE Model results

- All parts of the coil assembly remain in compression at nominal current
- Peak stress ~ 150 MPa
- The stress distribution is not symmetrical any more

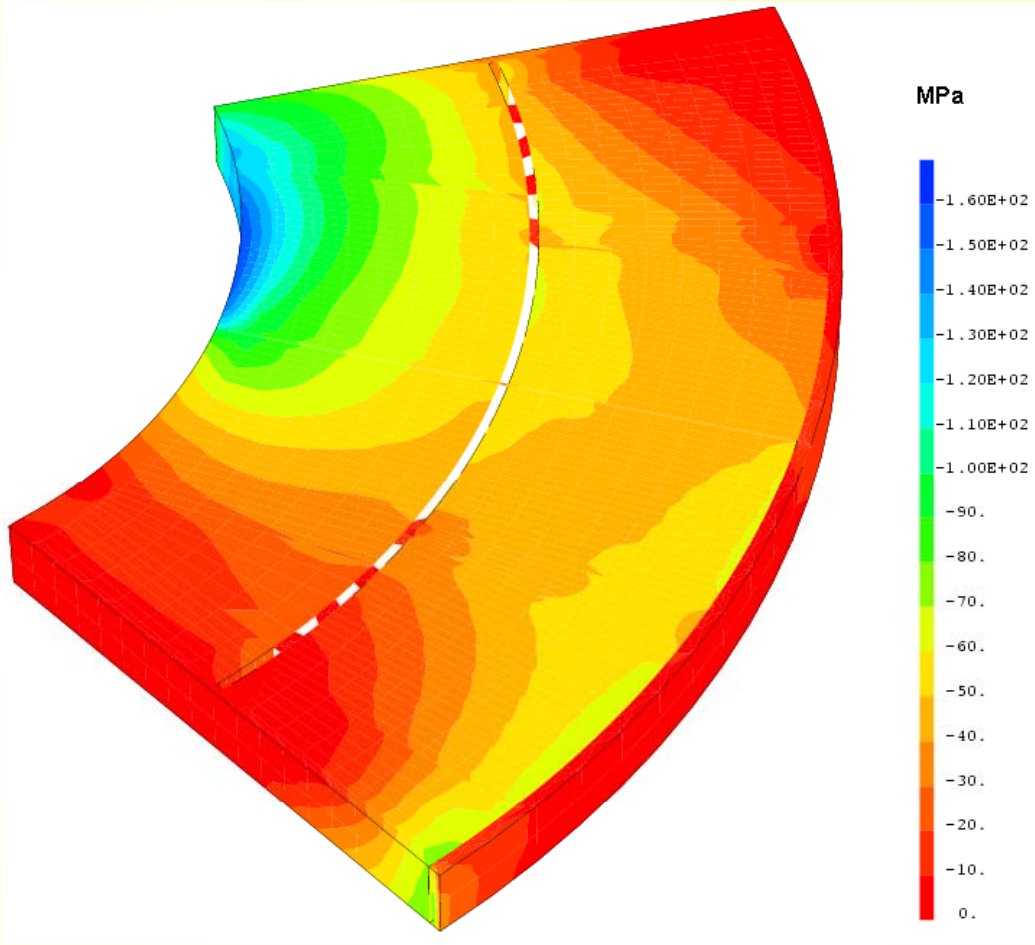

Azimuthal stress at 4.2 K and 11870 A with a solenoidal field of 2 T

Test

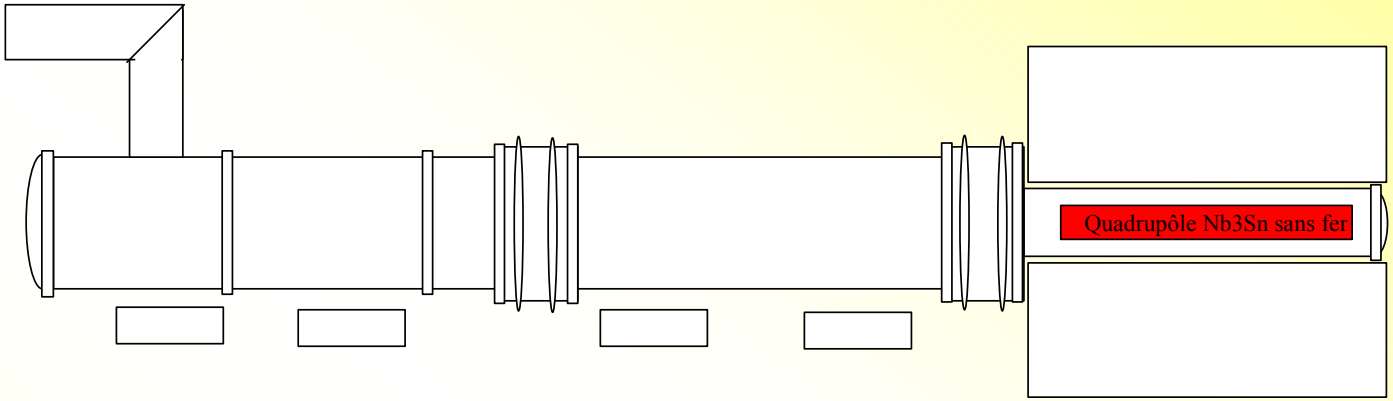

Test station at
CEA/Saclay

NMR 530

(magnetic field 2T)

Conclusions

- COFAST3D gives less numerical cost and more efficiency than a standard EF approach (industrial codes)

- Sufficient pre-compression is needed
  - to compensate the thermal shrinkage differentials during cool-down
  - to avoid a separation at the coil/collar pole interface at the nominal current

Conclusions

- All parts of coils remain in compression at nominal current and the peak stress is below 150 MPa at any time

- The effect of a background field induced by a solenoid on the magnet head must be taken into account to optimize the mechanical design of the quadrupole magnet